TONGANOXIE BOARD OF ZONING APPEALS

Agenda
March 5, 2020
7:00 p.m.
City Council Chambers
321 S. Delaware St.

1. **CALL TO ORDER**

2. **APPROVAL OF MINUTES –** February 6, 2020

3. **OLD BUSINESS**

4. **NEW BUSINESS**

5. **OPEN AGENDA**

6. **GENERAL INFORMATION**

7. **ADJOURN**

TONGANOXIE BOARD OF ZONING APPEALS
Meeting Minutes
February 6, 2020, 7:00 p.m.
City Council Chambers, 321 S. Delaware St.

CALL TO ORDER

- Chair John Morgan opened the meeting at 7:00 p.m.
- Roll Call: Board of Zoning Appeals ("Board") members present were Chair John Morgan, Vice Chair Monica Gee, Zach Stoltenberg, John Kirk, Patti Bitler and Crystal Hensen. No Board members were absent. City Manager George Brajkovic, City Attorney Anna Krstulic, Planning Clerk Melanie Tweedy and City Planner Chris Brewster with Gould Evans were also present.

1. APPROVAL OF MINUTES – January 2, 2020

- Mr. Kirk abstained from all Board discussion and voting.
- Ms. Gee noted that the only alteration is that the minutes approved at the January 2, 2020 meeting were from the December 5, 2019 meeting.
  - **Ms. Gee moved to approve the minutes from the January 2, 2020 Board meeting with the noted modification.**
  - **Mr. Stoltenberg seconded.**
  - **Vote of all ayes (5-0, 1 abstention), motion carried.**

2. OLD BUSINESS

a) Variance Application – 834 E. 4th Street – Submitted by Steve Trieb and Kelley Angell

- Mr. Brewster presented the planning report for the variance at 834 E. 4th Street. He stated that the lot is a legal nonconforming lot that does not meet the standards for lot area in the Moderate Industrial District (I-MD). Applicant is requesting variances from the right-of-way and side setbacks set forth in Section 17-015.A-B. Applicant is seeking a right-of-way setback of 40' instead of the required 50' and a 10' setback on the west side of the property instead of the required 25'.
- Mr. Brewster stated that any flood plain issues are addressed in the engineering report, which noted no issues.
- He stated that for the variances to be approved, the Board must find that the variances meet the five criteria that are addressed in the planning report. At this time, staff recommends approval.
- Mr. Morgan opened the public hearing portion of the meeting.
- Mr. Steve Trieb, the applicant, 204 S. Main Street, Tonganoxie, KS 66086, addressed the Board. He stated that he is requesting the side variance in order to allow for easier access to the rear of the building for loading and unloading of trucks.
- No one else spoke in favor of or opposition to the project.
- Mr. Morgan closed the public hearing portion of the meeting.
- Mr. Stoltenberg asked Mr. Brewster to confirm that the zoning of the property is I-MD. Mr. Brewster confirmed.
- Mr. Stoltenberg inquired about the specific landscaping requirements in this zoning district.
- Mr. Brewster responded that there are no set landscaping requirements for I-MD.
- Mr. Trieb stated that he would be open to including landscaping even though it is not required.

- Mr. Morgan led the discussion on the five criteria that must be met in order to grant the variances requested.
  - **Ms. Gee moved to approve a 20' variance for right-of-way setback (for a 30' right-of-way setback) and a 15' variance for the west side setback (for a 10' side setback).**
  - **Mr. Stoltenberg seconded.**
  - **Vote of all ayes (5-0, 1 abstention), motion carried.**

3. NEW BUSINESS

4. OPEN AGENDA

5. GENERAL INFORMATION

6. ADJOURN

- Meeting adjourned at 7:35pm

Respectfully submitted,

Melanie Tweedy, Planning Clerk

TONGANOXIE PLANNING COMMISSION

Agenda
March 5, 2020
7:00 p.m.
City Council Chambers
321 S. Delaware St.

*Note – This meeting may be transmitted via Facebook Live on the City of Tonganoxie page

CALL TO ORDER – Planning Commission Meeting

1. **APPROVAL OF PC MINUTES –** February 6, 2020

2. **OPEN AGENDA –** In order to speak during open agenda, you must sign in **before the meeting**. Please give your name and address to the City Clerk or designee. Comments will be limited to 3 minutes. Please wait to be recognized by the Chair and before speaking **state your name and address** for the record.

3. **NEW BUSINESS**

   a) Site Plan – 00000 Commerce Ave – Submitted by Brad Wilson of Wilson Glass
   b) CONTINUED - Site Plan – West Village Apartments - 00000 West Street (5.15 Acres) – Submitted by Tomica and Ljubinka Cvetkovic
   c) CONTINUED - Preliminary Plat – West Village Apartments - 00000 West Street (5.15 Acres) – Submitted by Tomica and Ljubinka Cvetkovic
   d) Consideration of Planning Commissioner Applcations

4. **OLD BUSINESS**

5. **GENERAL INFORMATION**
   a) Housing Reports – January 2020 Census, December 2019 and January 2020 Home Builders Association

6. **ADJOURN**

TONGANOXIE PLANNING COMMISSION
Meeting Minutes
February 6, 2020, 7:00 p.m.
City Council Chambers, 321 S. Delaware St.

CALL TO ORDER

- Chair John Morgan opened the meeting at 7:35 p.m.
- Planning Clerk Melanie Tweedy administered the oath of office to new Commissioner John Kirk.
- Roll Call: Planning Commission ("Commission") members present were Chair John Morgan, Vice Chair Monica Gee, Zach Stoltenberg, John Kirk, Patti Bitler and Crystal Hensen. No Commission members were absent. City Manager George Brajkovic, City Attorney Anna Krstulic, Planning Clerk Melanie Tweedy and City Planner Chris Brewster with Gould Evans were also present.

1. APPROVAL OF PC MINUTES – January 2, 2020

- **Ms. Gee moved to approve the minutes from the January 2, 2020 Commission meeting.**
- **Mr. Stoltenberg seconded.**
- **Vote of all ayes, motion carried.**

2. OPEN AGENDA

- No members of the public spoke.

3. NEW BUSINESS

4. OLD BUSINESS

a) Site Plan – 834 E. 4th Street – Submitted by Steve Trieb and Kelley Angell

- Mr. Brewster presented the planning report for the application. He noted that the industrial nature of this building offers limited requirements.
- Mr. Brewster stated that three parking spots are required and the lot does not need to be striped. There will be gravel for the lot and drive entry. The City Engineer and the Fire Department will need to review and approve access, public safety and drainage areas.
- Mr. Brewster stated that planning staff recommend approval with the conditions identified in his report.
- Mr. Trieb clarified that the fence will run along the front and the sides. The fence along the back will be delayed until the grade at the rear of the property is corrected.
- Mr. Stoltenberg asked if there will be lighting for the exterior of the property.
- Mr. Trieb responded that his insurance does require lighting on the building as well as cameras.
- Mr. Stoltenberg asked if the applicant is open to landscaping.
- Mr. Trieb replied that he is open to including landscaping.
- Mr. Stoltenberg recommended more trees and a landscaping buffer between the parking area and the sidewalk.
- Mr. Brajkovic asked for clarification on if there will be any outside storage.

CORE/3516145.0002/157981834.2

- Mr. Trieb replied that the purpose of the building is for storage and there would be no outside storage at the property.
  - **Mr. Stoltenberg moved to approve the Site Plan for 834 E. 4th Street with the planning report recommendations 1-5.**
  - **Ms. Gee seconded.**
  - **Vote of all ayes, motion carried.**

b) Special Use Permit – 704 E. 4th Street – Submitted by Desiree Kenney & Tots to Teens Childcare LLC

- Mr. Brewster presented the planning report. He discussed the surrounding properties and zoning. He stated that a childcare facility in the Historic Business District requires a Special Use Permit.
- Mr. Brewster stated that the project meets all of the requirements. Planning staff suggest switching out a proposed landscaping tree with a tree similar to those along 4th Street.
- Mr. Brewster said that the style of the building and fencing fits with the surrounding buildings downtown. Planning staff suggest the addition of a fencing feature, such as an arch or a gate, to break up the length of the fencing on the street side.
- Mr. Morgan opened the public hearing portion of the application.
- Desiree Kenney, applicant, 2261 Hatchell Road, Tonganoxie, KS 66086, addressed the Commission. She stated that she is open to all of the City Planner's suggestions. She said that she is consulting with professionals from Kansas State University to assist with sustainable, native landscaping. She stated that in place of a gate, she would prefer to offer an inset in the fence and have a bench with landscaping surrounding it.
- Mr. Stoltenberg asked if the fencing presented in the application will be the fencing used for the project.
- Ms. Kenney responded that the fencing on the street side would be similar to the fencing presented.
- Mr. Kirk asked about the height of the fencing.
- Mr. Kenney responded that KDHE requires a minimum height of 4' and the fence will likely stay at this height. She explained that 6' seems too tall.
- Mr. Morgan asked if there was anyone who wished to speak in opposition to the project.
- No one wished to speak.
- Ms. Krstulic asked if anyone had conversations or contact with the applicant or her professionals in regard to this project.
- Mr. Stoltenberg replied that he had spoken with Desiree two years ago in regard to a similar project on a different property.
- Mr. Morgan closed the public hearing and asked for additional comments from the Commission. There were none.
  - **Ms. Gee moved to approve the Special Use Permit for 704 E. 4th Street to allow a childcare facility in the historic business district with the six conditions in the planning report, including the standard two-year initial duration.**
  - **Ms. Bitler seconded.**
  - **Vote of all ayes, motion carried.**
  - **Ms. Gee moved to approve the Site Plan for 704 E. 4th Street with the three recommendations in the planning report.**
  - **Ms. Bitler seconded.**
  - **Vote of all ayes, motion carried.**

DRAFT

c) Preliminary Plat and Site Plan for West Village Apartments.

- Mr. Brajkovic informed the Commission that the applicant has been in contact with City staff and will submit the site plan and preliminary plat to be considered together. He said that the applicant is also working with KDOT on additional right of way requested by KDOT.
  - **Ms. Gee moved to continue this matter to March 5, 2020.**
  - **Ms. Bitler seconded.**
  - **Vote of all ayes, motion carried.**

5. GENERAL INFORMATION

a) Upcoming Planning Commission Nominations and Elections

- Mr. Brajkovic stated that Ms. Krstulic will be working to update the bylaws, including clarifying the election process. They anticipate that a draft will be available at the next meeting.
- Ms. Bilby addressed the terms and said that the last Commission election occurred in August 2017.
- Mr. Brajkovic said that Ms. Krstulic and Mr. Brewster will offer training after the remaining open position on the Commission is filled.
- The Commission discussed training opportunities, including questions about the Comprehensive Plan.

6. ADJOURN

- **Ms. Gee moved to adjourn the meeting.**
- **Mr. Morgan seconded.**
- **Vote of all ayes, motion carried.**
- **Meeting adjourned at 8:49 p.m.**

Respectfully submitted,

Melanie Bilby, Planning Clerk

DRAFT

City of Tonganoxie, Kansas

PLANNING STAFF REPORT

Case#: 2020-002P

Date of Report: February 25, 2020

Applicant Name: B&L Ventures, LLC Shop for Wilson Glass, Brad Wilson

Property Owner Name: Leavenworth County Port Authority

Subject Property Address: Southwest Corner of Commerce Avenue and North Industrial Drive, Tonganoxie, KS 66086 (00000 Commerce Ave, Tonganoxie, KS 66086)

Application:

Zoning District: "I-LT" Light Industrial District
Type of Approval Desired: Site Plan Approval for the construction of two new buildings and associated site improvements.
Date of Application: February 20, 2020
Date of Meeting: March 5, 2020

Surrounding Property – Zoning and Use:

West: "I-LT" Light Industrial; vacant
South: "I-LT" Light Industrial; vacant
East: "I-LT" Light Industrial; vacant
North: "I-LT" Light Industrial and "I-MD" Moderate Industiral; two industrial buildings.
Vicinity: The property in question lies within an industrial park setting with a mix of light and moderate industrial zoning, adjacent to the north of General Business zoning along US 24 / 40. Approximately 1/3 of the area described is developed with the rest vacant.

Staff Recommendation:

Staff recommends approval.

I. PROJECT DESCRIPTION

A. Subject Property. The property is a 1.56-acre lot on the southwest corner of Commerce Drive and Industrial Drive in the Urban Hess Business Park. The lot is zoned Light Industrial (I-LT), and is currently vacant. It abuts similarly zoned property on all sides and across the streets. The lot dimensions are 227.6' wide x 300' deep. The lot was previously platted and meets the I-LT standards for lot area.

B. Proposal. The applicant proposing to build a new building on the site with new parking and access drives. The Tonganoxie Zoning ordinance also requires that all new buildings in industrial zoning districts have a site plan reviewed and approved by the Planning Commission.

II. REVIEW CONSIDERATIONS

Site plans are reviewed according to all of the applicable zoning district standards as well as Article 9 of the subdivision regulations (Site Plan Review Standards).

The following are the I-LT zoning standards

	I-LT Standards	Proposed Project
Lot Area	1.0 acres	1.56 (existing
Lot Width	100'	227.6' (existing)
Lot Depth	150'	300' (existing)
Height	3 stories / 45'	14' to 14. 3 feet
Front Setback	35'	82.27'
Side Setback	20'	60' (east); 117' (west) - approximate
Rear Setback	25'	118' - approximate
Parking	1 space per 1,000 s.f. (5 required)	6 spaces
Landscape	Buffer planting (along residential property) • Large shade trees (40' on center) • Large shrub (8' on center) • Not applicable in this case Right-of-way Buffer • 20' buffer • No specific planting requirements; performance standards Other areas (storage, mechanical, screening): • Performance standards with a combination of fence and landscape	• 4 large shade trees in east side yard

Article 9 of the Subdivision Regulations include the City's Site Plan Standards and Review Criteria. They apply to any new construction in industrial districts [1.2.1.1]. They specifically include the following standards:

1. ***Articulation of Wall and Roof Planes [3.1].*** Buildings more than 2,000 square feet are required to have a 3-to-1 ration of facade articulation, meaning a building should not be more than 3 times its height wide, without offsets. The intent of this standard is to break up large expanses of walls and to add a three-dimensional quality to structures.

This building is approximately 14' high. Three times this is approximately 42'. The front and rear elevations are 50' and do not require an offset. The side elevations are approximately 100'. Neither elevation provides off-sets, however the side elevation has vertical trim elements indicating structural bays approximately every 25', and the front and rear elevations are only 8' over the proportion that would require off-sets with a building this high. The intent of this standard is to avoid longer and uninterrupted building masses, and improve the relationship of buildings to adjacent property and streetscape. The standard uses the 3:1 proportion as the rule to accomplish this. Based on the low height of the building, the large distance from the setbacks from both the street and adjacent property, the context of the site in an industrial area, and the fact that the building does simulate similar proportions in other ways, the Planning Commission should consider whether this alternative design meets the intent of the standard for this particular plan and context.

2. ***Cladding and Roofing Materials [3.2].*** Metal buildings with a quality appearance is acceptable in industrial districts. Other materials may be approved by the Planning Commission on a case-by-case basis, specifically to account for uses such as car wash, auto maintenance or storage buildings where a large portion of the wall may be doors or other types of openings.

   The proposed building is a corrugated metal panel building and includes sculptured eave trim on the side elevations. It is proposed with a gray base color with white trim and accents.

3. ***Visual Elements [3.3].*** Retail or office portions of industrial buildings require 30% of the facade and street walls to have design elements that allow visual penetration to the interior of buildings such as display units, windows and doors. The intent of this standard for industrial buildings is to break up monotonous, impersonal facades.

   This building only includes a front entry and windows on the front facade, and two large garage bays. It is unclear which portions of the building is intended for storage vs. any retail or office portions of the building, however the "business entrance" portion of the building includes transparency and visual elements that relate to the site. The Planning Commission should consider whether this alternative design meets the intent of the standard for this particular plan and context.

4. ***Color / Patterns / Textures for Facades and Street Walls [3.4].*** Colors, patterns and textures of exterior buildings or coatings are to be compatible with existing surroundings. Extremely bright or fluorescent colors should be avoided.

   This building is proposed to be gray with white accents. There is not a consistent building fabric in this area as it includes a mix of vacant lots and industrial buildings. However, the proposed building is similar in scale, color and materials to some of the buildings in the area.

5. ***Axillary Elements [3.5].*** Screening of mechanical equipment, trash, or loading areas for industrial buildings should be to the rear or otherwise create from the street or residential areas.

   Mechanical equipment, trash and loading areas are not specifically designated on the site plan. There are two "loading doors" indicated on the front elevation and one on the street side (east elevation), and each will be accessed from a concrete drive. These elevations are 82.27' and 60' (approx.) from the streets. In association with the landscape recommendations related to the streetscape, the loading areas are sufficiently minimized considering the context of this area, the scale of the building to the site, and its relation to the overall streetscape. To the extent any

mechanical, storage, or loading areas are included on the site, they shall be subject to further permit reviews by staff to ensure they meet the fence and/or landscape standards to screen these areas from the streetscape and adjacent property. (24-012.C)

6. ***Landscape [4.0 and Section 17-011.G, and Section 24].*** A landscape plan is required to demonstrate buffering and screening, contribute to the overall appearance of the site, contribute to the character of the area, and help manage any runoff or similar mitigation of site impacts that can be accomplished with vegetation. Additionally, the I-LT district requires a 20' landscape strip to be maintained along all rights-of-way (17-011.G.).

   A detailed landscape plan is not submitted, although the site plan shows 4 shade trees along Industrial Avenue on the east side of the lot. However the goals and performance criteria of the site design / landscape section would suggest landscape materials, be included in the frontage buffer area, or along the foundation of the building and the parking area, to improve the appearance and relation to the streetscape. The only specific landscape standards for the I-LT district (other than the presence of the frontage buffer and screening requirements), and the performance criteria of the site plans standards, relate to buffers along property adjacent to residential zoning. This requires shade trees, 40' on center and large shrubs 8' on center. While those specific standards are not directly applicable here, staff does recommend that the 40' on center standard for shade trees be applied to this site. This standard – rather than any landscape and plantings in relation to the building or other open spaces, can have a more significant impact on the Urban Hess business park if carried out along all streets. Staff recommends that all landscape be allocated to these areas and that approximately 10 to 12 shade trees be planted and spaced evenly along the street perimeters of the property (instead of the 4 internal to the lot shown on the site plan), with at least 3 allocated to the areas near the parking on Commerce Drive and Industrial Drive.

7. ***Parking [17-016].*** The I-MD district requires 1 space for every 1,000 square feet of buildings and the parking shall be setback 10' from the property lines. Parking slots of more than 6 spaces require painted lines or curbs (20-101.F.). All parking shall be surface with a bituminous or concrete pavement meeting the standards and specifications of the City. Alternative materials may be approved for low use parking areas such as fire safety lanes or overflow parking. [20-010.H]

   The proposed building requires 5 parking spaces, and due to the small nature of the parking requirement, the area does not necessarily need to be striped. A paved parking area is designated in front of the building, meets all dimension and location standards, and located approximately 10' (+/-) from the front lot line. This does not meet the required 20' landscape buffer; however, elsewhere in the standards parking is permitted within 10' of the property line. [However, see landscape comments related to the 20' right-of-way buffer.]

8. ***Stormwater [5.0].*** Section 5.0 includes a variety of stormwater standards and performance criteria to be administered by the City Engineer. It includes provisions for engineering studies, stormwater management plans, or waivers of requirements for projects under certain thresholds..

   The City Engineer reviewed this project and determined that detention for this area has been accounted for by a previous study drainage study for Urban Hess Business Center Phase 2, and has been constructed. No action is necessary in relation to the proposed site plan. See City Engineer Memo dated February 20, 2020.

9. ***Exceptions [1.7].*** Where site plans do not meet any of the standards, the Planning Commission may grant exceptions to the standards in the following situations: the standard would create a hardship beyond the control of the applicant; OR the exception is a minor modification where the intent and purpose of the standard is fulfilled.

Based on the information submitted, the application does not meet, or it is not clear that it meets, the following standards:

- The front and site elevation would require articulation or off-sets, since it is greater than a 3:1 ratio. The intent of this standard is to break up larger wall planes. However this wall plane is not very tall (14'), is set back substantially from the street and side properties, and has other elements that simulate the 3:1 ratio.
- Portions of the building elevations lack visual elements that create transparency on the facade and street wall (30%). The intent of this standard for industrial buildings is to break up monotonous, impersonal facades. However, this building does not include and substantially evident retail or office components and does have human-scale elements associated with the business entrance. It is setback substantially from the street on all sides.

III. EFFECT OF DECISION

Approval of the site plan authorizes the applicant to proceed to building permits. Prior to issuance of these permits the applicant must construction documents demonstrate compliance with all standards of the City, demonstrate compliance with the approved site plan, and compliance with any conditions of the site plan approval. If the site plan is not approved by the Planning Commission, the applicant may appeal this decision to the City Council.

IV. Staff Recommendation

The Planning Commission may approve the site plan. However, any approval shall be based on the following:

1. A determination that the articulation of the walls is not required due to the scale of this building and the nature of the front and side elevations to adjacent property not being important to the intent of the articulation standard.
2. A determination that visual elements on the street wall are not required due to either (a) the fact that this building is an industrial building that does not include any office or retail components; and/or (b) the building is set back far enough from the street that visual elements are not crucial to the buildings.
3. The applicant shall confirm that all storage, mechanical equipment or other auxiliary elements shall be located behind the fenced area, or otherwise screened and not visible from the street. Specifications for the fence that meet the City ordinance shall be turned in at the time of building permits. Any other visible features shall require landscape screening.
4. Landscape be prioritized in the 20' buffer area on Commerce Drive and Industrial drive. 10 to 12 shade trees should be located in this area, evenly spaced to emphasize the streetscape (rather than the 4 shade trees shown in the side yard area). This reflects roughly the 40' on center requirement applied elsewhere in the zoning ordinance, with some reduction for the fact that this is a corner lot. However, at least 3 of these trees should be located in the areas where parking is adjacent to Commerce and Industrial drives to provide shade and buffer to these area. The species and specific plan shall

meet the requirements of Section 4.0 (species, location and planting specifications) of the site design standards and approved by staff.

If the Planning Commission determines that this application does not meet any of the standards, or that these recommended conditions to the standards or exceptions do not meet the intent and requirements, it may deny the application, stating the specific reasons for denial.

_____

Chris Brewster, Contract City Planner
Gould Evans

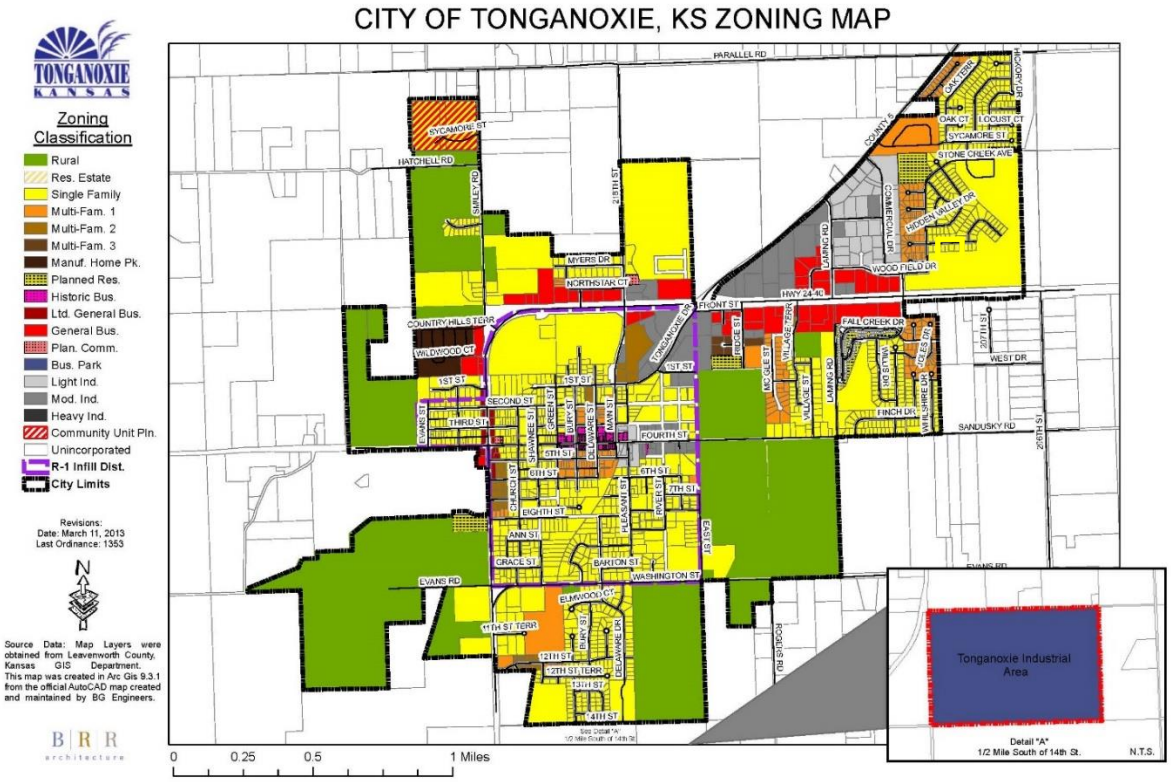

Current City Zoning *(property in red box zoned GBD)*

Vicinity

Site

BG CONSULTANTS
ENGINEERS · ARCHITECTS · SURVEYORS

MEMO

To:	George Brajkovic, City Manager City of Tonganoxie
Cc:	Dan Porter, Asst. City Manager Kent Heskett, City Superintendent Chris Brewster, City Planner
From:	Brian Kingsley, City Engineer
Date:	February 20, 2020
Re:	Wilson Glass Site Plan Review 20-1001L

The following are the City Engineer and staff review comments related to Engineering issues:

Storm Water Management Plan:

1) Storm Water Detention for this lot was accounted for in the Revised Drainage Study for Urban Hess Business Center Phase 2 dated September 2002. The proposed detention facility has been constructed.

Recommendation: The storm water management for the site has been previously approved. No action is necessary.

Site Plat:

1) Proposed water and Sewer Service details should be coordinated with the City Superintendent.
    a. A copy of the City Sanitary Sewer Standard detail sheet is attached. When connecting a sewer service directly into a manhole, an inside drop structure should be used similar to the Precast Inside-Drop Manhole detail.

Recommendation: The City should consider approval contingent upon the above issues being addressed.

--END

For questions or comments, please contact:
Brian Kingsley, PE
President
BG Consultants, Inc.
T: 785.727.7261
E: brian.kingsley@bgcons.com

GENERAL NOTES FOR SANITARY SEWER CONSTRUCTION

1. THE MINIMUM INSIDE DIAMETER OF THE MANHOLE SHALL BE 4'–0" FOR PIPE DIAMETERS FROM 12" THRU 24", 5'–0" FOR PIPE DIAMETER FROM 27" THRU 36" AND 6'–0" FOR PIPES DIAMETER 42" THRU 48". ALL MANHOLE BASES (PRECAST OR POURED–IN–PLACE) SHALL HAVE #4 REINF. BARS PLACED ON 6" CENTERS BOTH WAYS LOCATED AT MID–DEPTH OF THE BASE.
2. PRECAST MANHOLES SHALL BE DESIGNED AND CONSTRUCTED IN COMPLIANCE WITH ASTM C–478 AND THE KANSAS DEPARTMENT OF HEALTH AND ENVIRONMENT MINIMUM STANDARDS OF DESIGN.
3. PRECAST MANHOLE WALL THICKNESS: THE MINIMUM WALL THICKNESS FOR MANHOLES WITH A HEIGHT LESS THAN 16' SHALL BE 1/12 OF THE INTERNAL SHELL DIAMETER OR 4", WHICHEVER IS GREATER. THE MINIMUM WALL THICKNESS FOR MANHOLES WITH A HEIGHT OF 16' OR GREATER SHALL BE 1/12 THE INTERNAL SHELL DIAMETER PLUS 1" OR 5", WHICHEVER IS GREATER.
4. THE BOTTOM RISER AND THE BASE SHALL BE CAST TOGETHER AS ONE MONOLITHIC STRUCTURE.
5. REINFORCING STEEL:
   - 5.1. REINFORCING BARS SHALL CONFORM TO ASTM A–615 (GRADE 60) SPECIFICATIONS.
   - 5.2. WELDED WIRE FABRIC SHALL MEET ASTM A–185 SPECIFICATIONS.
   - 5.3. CUTTING AND PLACING OF REINFORCEMENT SHALL COMPLY WITH ACI 318.
6. CONCRETE:
   - 6.1. ALL PRECAST AND CAST–IN–PLACE CONCRETE SHALL BE AIR–ENTRAINED, PORTLAND CEMENT CONCRETE WITH THE FOLLOWING PROPERTIES:

MINIMUM 28–DAY COMPRESSIVE STRENGTH	4000 PSI
MAXIMUM WATER/CEMENT RATIO	0.40
COARSE AGGREGATE	KDOT CLASS 1
AIR CONTENT	4% TO 8%
SLUMP	2" TO 4"

   - 6.2. READY–MIX CONCRETE SHALL COMPLY WITH ASTM C–94 SPECIFICATIONS.
7. PRECAST MANHOLES FOR NEW SANITARY SEWER CONSTRUCTION SHALL BE FABRICATED USING A–LOK X–CEL (OR APPROVED EQUAL) FLEXIBLE PIPE–TO–MANHOLE CONNECTORS CAST INTEGRAL IN THE MANHOLE WALL.
8. CONNECTION OF NEW SANITARY SEWER CONSTRUCTION TO EXISTING STRUCTURES SHALL BE ACCOMPLISHED USING AN A–LOK G3 BOOT SYSTEM (OR APPROVED EQUAL) AS SHOWN IN THE DETAIL (THIS SHEET) AND INSTALLED ACCORDING TO THE MANUFACTURER'S SPECIFICATIONS.
9. MASTIC MATERIAL SHALL BE USED AT ALL SECTIONS JOINTS. O–RINGS MAY BE USED FOR JOINTS BELOW THE CONE SECTION, BUT NOT FOR THE CONE SECTION ITSELF.
10. STEPS SHALL BE OMITTED FROM MANHOLES. THE CONTRACTOR HAS THE OPTION TO HAVE PRECAST MANHOLES FABRICATED WITH STEPS FOR ACCESS DURING CONSTRUCTION, BUT THE CONTRACTOR WILL BE REQUIRED TO CUT OFF THE STEPS AND GRIND THE EMBEDDED MATERIAL SMOOTH/FLUSH WITH THE INSIDE OF THE MANHOLE PRIOR TO THE CITY'S ACCEPTANCE OF WORK.
11. FLOWABLE FILL SHALL BE A LOW STRENGTH (DIGGABLE) MIX AS SPECIFIED IN THE KDOT STANDARD SPECIFICATIONS.
12. ALTERNATIVE TO FLOWABLE FILL: FOR TRENCHES 5 FEET OR LESS IN DEPTH, THE CONTRACTOR MAY USE COMPACTED AB–3 FOR TRENCH BACKFILL IN COMPLIANCE WITH THESE SPECIFICATIONS. TRENCH DEPTH SHALL BE MEASURED FROM THE BOTTOM OF THE TRENCH EXCAVATION TO THE EXISTING GROUND ELEVATION MEASURED AT THE ALIGNMENT OF THE SANITARY SEWER.
   - 12.1. PRIOR TO CONSTRUCTION, THE CONTRACTOR SHALL PROVIDE THE CITY OF TONGANOXIE WITH A REPORT FROM AN INDEPENDENT TESTING LABORATORY SUMMARIZING THE EVALUATION OF THE PROPOSED AB–3 MATERIAL AND RECOMMENDATIONS REGARDING THE MINIMUM CONSTRUCTION REQUIREMENTS OF THE PROPOSED AB–3 MATERIAL. THE REPORT AND EVALUATION OF THE AB–3 MATERIAL SHALL BE PERFORMED UNDER THE DIRECT SUPERVISION OF A GEOTECHNICAL ENGINEER LICENSED TO PRACTICE ENGINEERING IN THE STATE OF KANSAS.
   - 12.2. MINIMUM CONSTRUCTION REQUIREMENTS FOR COMPACTED AB–3 TRENCH BACKFILL SHALL BE AS SPECIFIED IN THE GEOTECHNICAL ENGINEERING REPORT, BUT IN NO INSTANCE SHALL THE MINIMUM REQUIREMENTS BE LESS STRINGENT THAN AS SPECIFIED BELOW.
     - 12.2.1. THE MAXIMUM COMPACTED THICKNESS OF ANY LAYER/LIFT OF AB–3 SHALL BE 6 INCHES THICK. THE CITY MAY ALLOW ANY LAYER/LIFT TO BE INCREASED TO 8 INCHES THICK WHEN VIBRATING COMPACTION EQUIPMENT IS UTILIZED AND ACHIEVES THE MINIMUM COMPACTION REQUIREMENTS BELOW.
     - 12.2.2. COMPACT EACH LAYER/LIFT TO A MINIMUM UNIFORM DENSITY OF 95% OF THE MATERIAL'S MAXIMUM DRY DENSITY AS DETERMINED BY THE STANDARD PROCTOR.
     - 12.2.3. THE AB–3 MATERIAL SHALL BE PUGGED WITH A SUFFICIENT QUANTITY OF POTABLE WATER TO ALLOW COMPACTION OF THE MIXTURE TO THE SPECIFIED DENSITY.
   - 12.3. CERTIFIED DENSITY TESTING OF THE COMPACTED AB–3 TRENCH BACKFILL SHALL BE PERFORMED ON EACH LAYER/LIFT BY AN INDEPENDENT TESTING COMPANY. ALL COSTS FOR SUCH TESTING ARE TO BE BORNE BY THE CONTRACTOR, WITH THE SELECTED INDEPENDENT TESTING COMPANY APPROVED BY AND REPORTING DIRECTLY TO THE CITY OF TONGANOXIE.
   - 12.4. THE ABOVE SPECIFICATIONS SHALL APPLY TO THE TOP 5 FEET OF TRENCH BACKFILL FOR TRENCH DEPTHS EXCEEDING 5 FEET DEEP, PROVIDED FLOWABLE FILL IS UTILIZED AS TRENCH BACKFILL BELOW THE 5 FOOT DEPTH AND HAS ACHIEVED SUFFICIENT STRENGTH PRIOR TO PLACING COMPACTED AB–3 TRENCH BACKFILL.

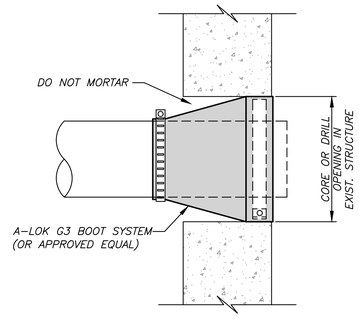

EXISTING MANHOLE CONNECTION DETAIL

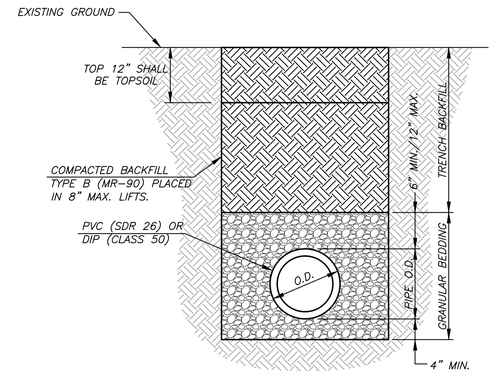

TRENCH DETAIL OUTSIDE OF PAVEMENT

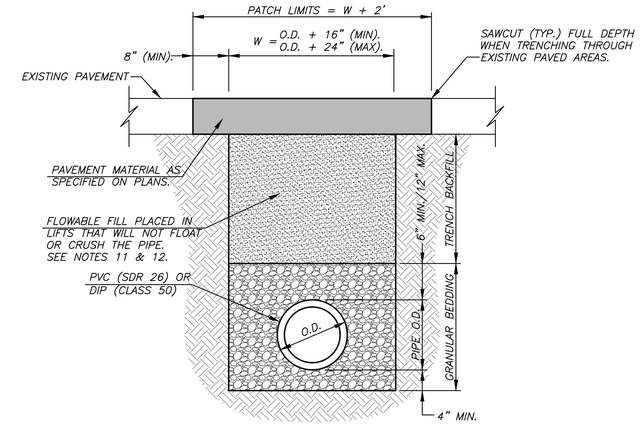

TRENCH DETAIL UNDER PAVEMENT (STREET, DRIVEWAY OR SIDEWALK)

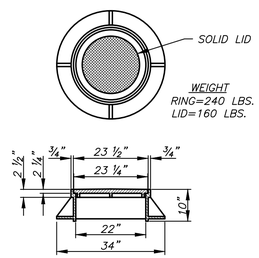

TYPE I RING AND LID

CLAY & BAILEY #2008, DEETER #1315, OR APPROVED EQUAL.

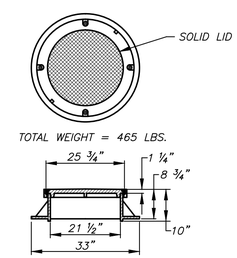

TYPE II SEAL DOWN RING AND LID

CLAY & BAILEY #2014, DEETER #1313, OR APPROVED EQUAL.

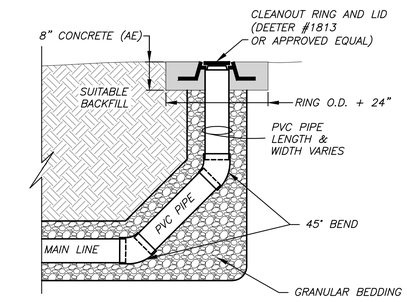

SANITARY CLEANOUT DETAIL

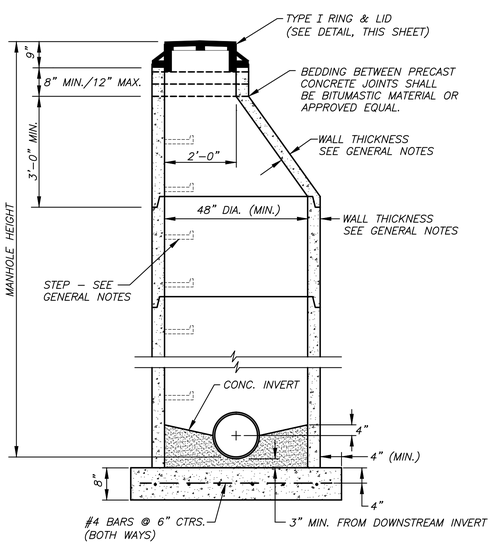

STANDARD PRECAST MANHOLE (ECCENTRIC CONE)

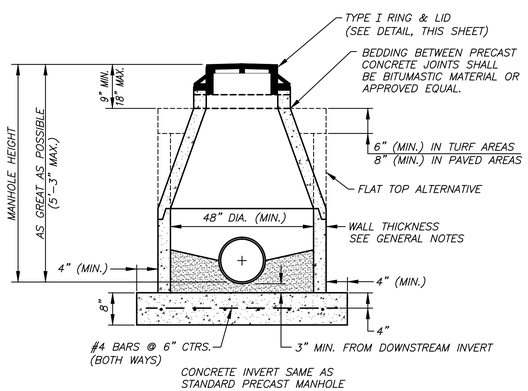

SHALLOW PRECAST MANHOLE (CONCENTRIC CONE OR FLAT TOP)

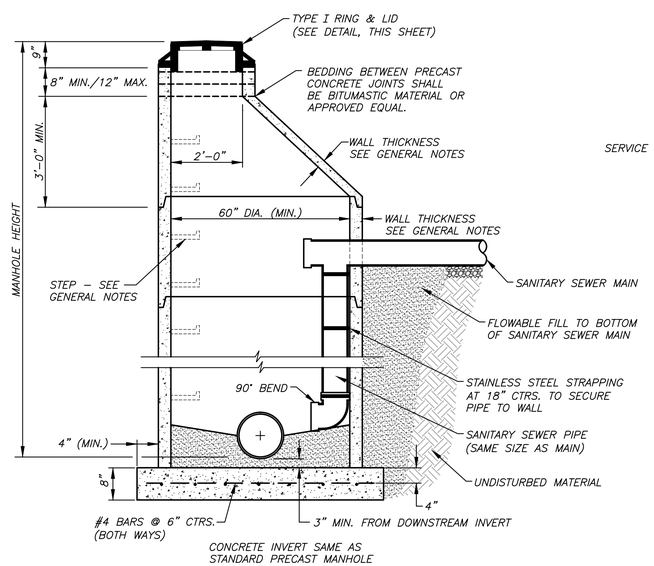

PRECAST INSIDE-DROP MANHOLE (ECCENTRIC CONE)

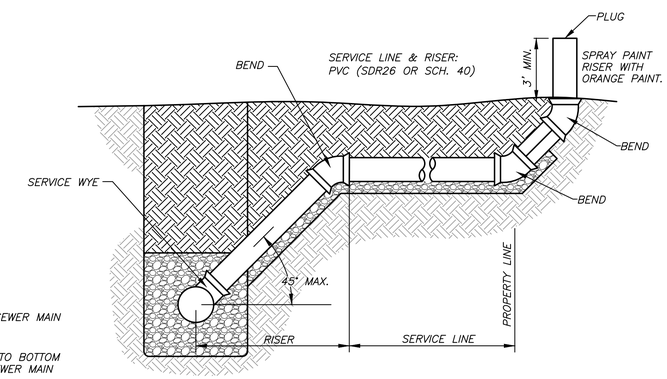

STANDARD INSTALLATION SERVICE LINE AND RISER DETAILS

Rev.	Description	Date
1	Revised General Note 11 and added General Note 12.	01/31/2017

REVISIONS

TONGANOXIE KANSAS

Public Works Department
City Standard Details
2017 Edition

SANITARY SEWER DETAILS #1

City Engineer: Brian Kingsley, P.E. (BG Consultants, Inc.)

Sheet No. ____ of ____

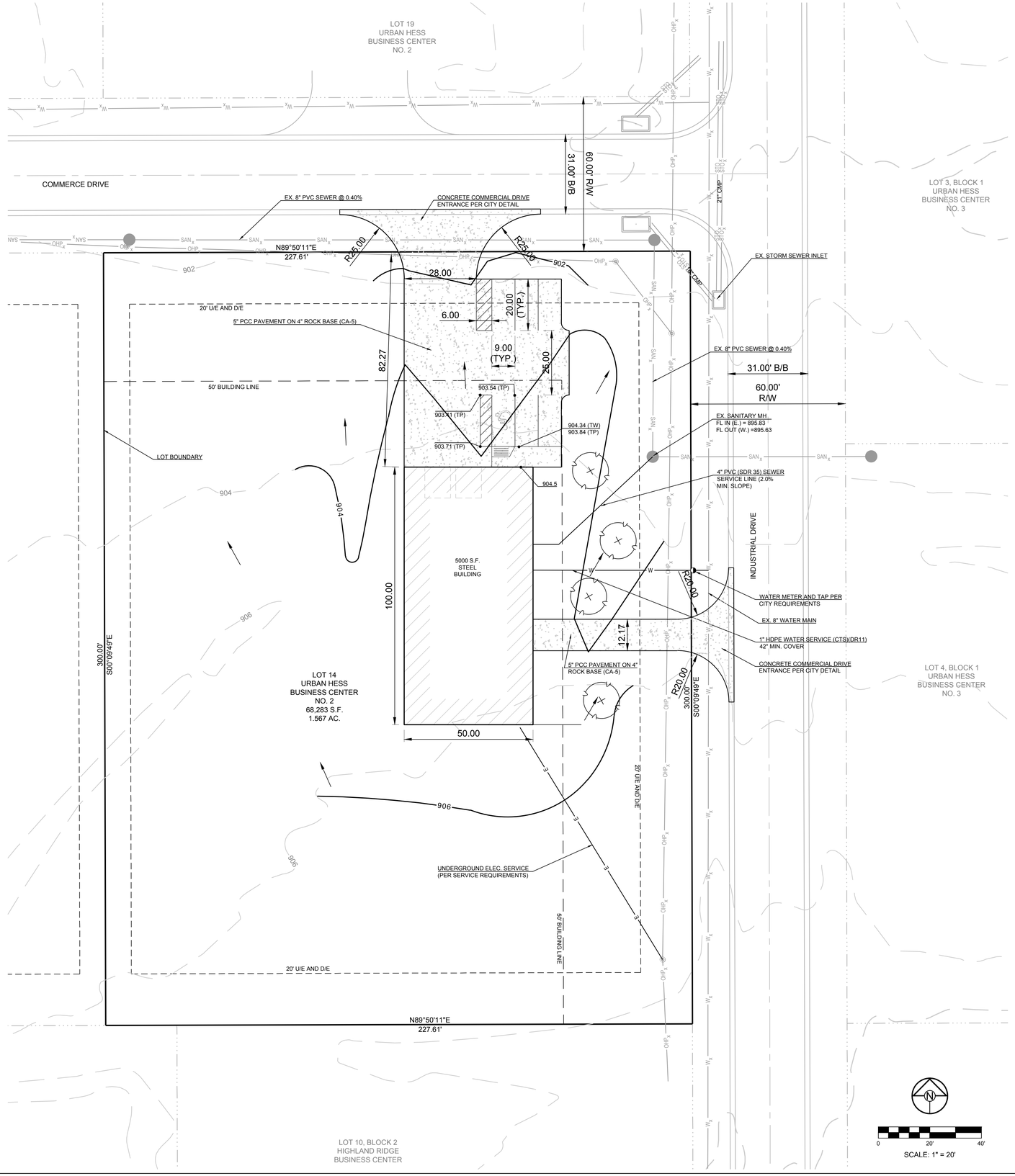

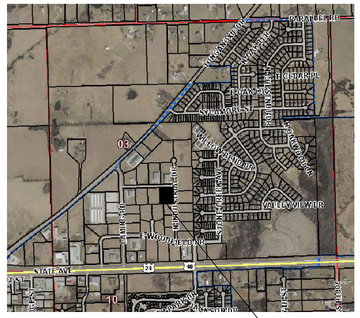

LOCATION MAP
(NOT TO SCALE)

PROJECT LOCATION

DESCRIPTION:

LOT 14 URBAN HESS BUSINESS CENTER NO. 2, A SUBDIVISION OF LAND IN THE CITY OF TONGANOXIE, LEAVENWORTH COUNTY, KANSAS

GENERAL NOTES:

1. Topography and adjacent plat and improvements from LEAVENWORTH COUNTY G.I.S..
2. Existing utilities have been shown to the greatest extent possible based upon field locates by utility companies and information provided to the engineer.
3. Adjacent parcel information is based upon adjacent recorded plats. This site plan does not depict a Boundary Survey.
4. All parking lot lighting shall comply with the city codes and ordinances.
5. All new on-site wiring and cable shall be placed underground per the city codes and ordinances.
6. All above ground electrical and/or telephone cabinets shall be placed within the interior side or rear building setback yards unless the planning official approves the placement of the cabinets in the front or corner yard as outlined in the city code.
7. All wall and monument signs will require a sign permit through the codes division.
8. All parking spaces shall meet the requirements in the UDO
9. All improvements must meet the City of Tonganoxie design criteria, standards and codes.
10. Stormwater Detention is provided in the regional detention basis, per the "REVISED DRAINAGE STUDY FOR URBAN HESS BUSINESS CENTER PHASE 2" prepared by Gary Ditty of Landplan Engineering, P.A., dated September 2002.

SITE INFORMATION :

CURRENT ZONING: INDSUTRIAL
PROPOSED ZONING: INSUSTRIAL
CURRENT USE: Vacant - undeveloped
PROPOSED USE: INDSUTRIAL
SITE AREA - LOT 14 1.57 AC.

PROPOSED BUILDING AREA 5000 S.F.

PARKING PROVIDED: 6 SPACES (INCLUDING 1 A.D.A.)

LEGEND :

D/E - DRAINAGE EASEMENT
FL - FLOW LINE
ROW or R/W - RIGHT-OF-WAY
S/E - SANITARY SEWER EASEMENT
S/W - SIDEWALK
U/E - UTILITY EASEMENT
OHP$_x$ — OVERHEAD POWER LINE - EXIST.
EXISTING SANITARY MANHOLE
SAN$_x$ — SANITARY SEWER MAIN - EXIST.
STO$_x$ — STORM SEWER - EXISTING
POWER POLE
W$_x$ — WATERLINE - EXISTING
CURB & GUTTER
CONCRETE - PROPOSED
DRAINAGE ARROW
2.5" CALIPER SHADE TREE

SCHLAGEL
ENGINEERS PLANNERS SURVEYORS LANDSCAPE ARCHITECTS
14920 W. 107TH STREET • LENEXA, KANSAS 66215
(913) 492-5158 • Fax: (913) 492-8400
WWW.SCHLAGELASSOCIATES.COM

PREPARED BY:

SCHLAGEL & ASSOCIATES, P.A.

WILSON GLASS
LOT 14, URBAN HESS BUSINESS CENTER NO. 2
TONGANOXIE, KANSAS

REVISION DATE	DESCRIPTION
1 #######	########
2 #######	########
3 #######	########
4 #######	########
5 #######	########
6 #######	########
7 #######	########
8 #######	########
9 #######	########
10 #######	########

DRAWN BY:	MAB
CHECKED BY:	MAB
DATE PREPARED:	02/24/2020
PROJ. NUMBER:	#####

SITE PLAN

SHEET

1

SITE PLAN REVIEW APPLICATION
City of Tonganoxie, Kansas

www.tonganoxie.org
913-845-2620

Please complete all of the following information (type or print):

Project Name: B&L VENTURES, LLC SHOP FOR WILSON GLASS

Project Address/Location: URBAN HESS

Description: X New Construction ____ Addition ____ Exterior Remodel ____ Tenant Finish

Other: _____

Send Review Comments To:

Contact Person: BRAD WILSON

Company Name: B&L VENTURES, LLC

Address: 1011 PLEASANT DR

City, State Zip: TONGANOXIE, KS 66086

Phone Number: 816-585-8405 Fax Number: _____

E-mail Address BRAD@WILSONGLASS.NET

Owner/Developer (If different from above):

Contact Person: _____

Company: _____

Address: _____

City, State Zip: _____

Phone Number: _____ Fax Number: _____

E-mail Address _____

- ☐ X Site Plan--buildings, walls, fences, exterior equipment, refuse disposal
- ☐ X Landscape plan w/schedule
- ☐ X Drainage calculations for City Engineer
- ☐ X Elevations showing materials, colors, textures, etc.

Date Submitted: 2-20-2020 Fee Paid: _____ Received by _____

***It is the responsibility of the Applicant to read and comply with all of the regulations contained in the Site Review Ordinance. Applicant should anticipate a minimum 2 week review period by City Staff. Any revisions required will require additional review time.**

WILSON
GLASS, LLC

SPLICE PLATE & BOLT TABLE									
Mark	Qty Top	Bot	Int	Type	Dia	Length	Width	Thick	Length
SP-1	4	4	0	A325	0.750	3.00	6"	5/8"	2'-2 7/8"
SP-2	4	4	0	A325	0.625	2.25	6"	1/2"	1'-6"

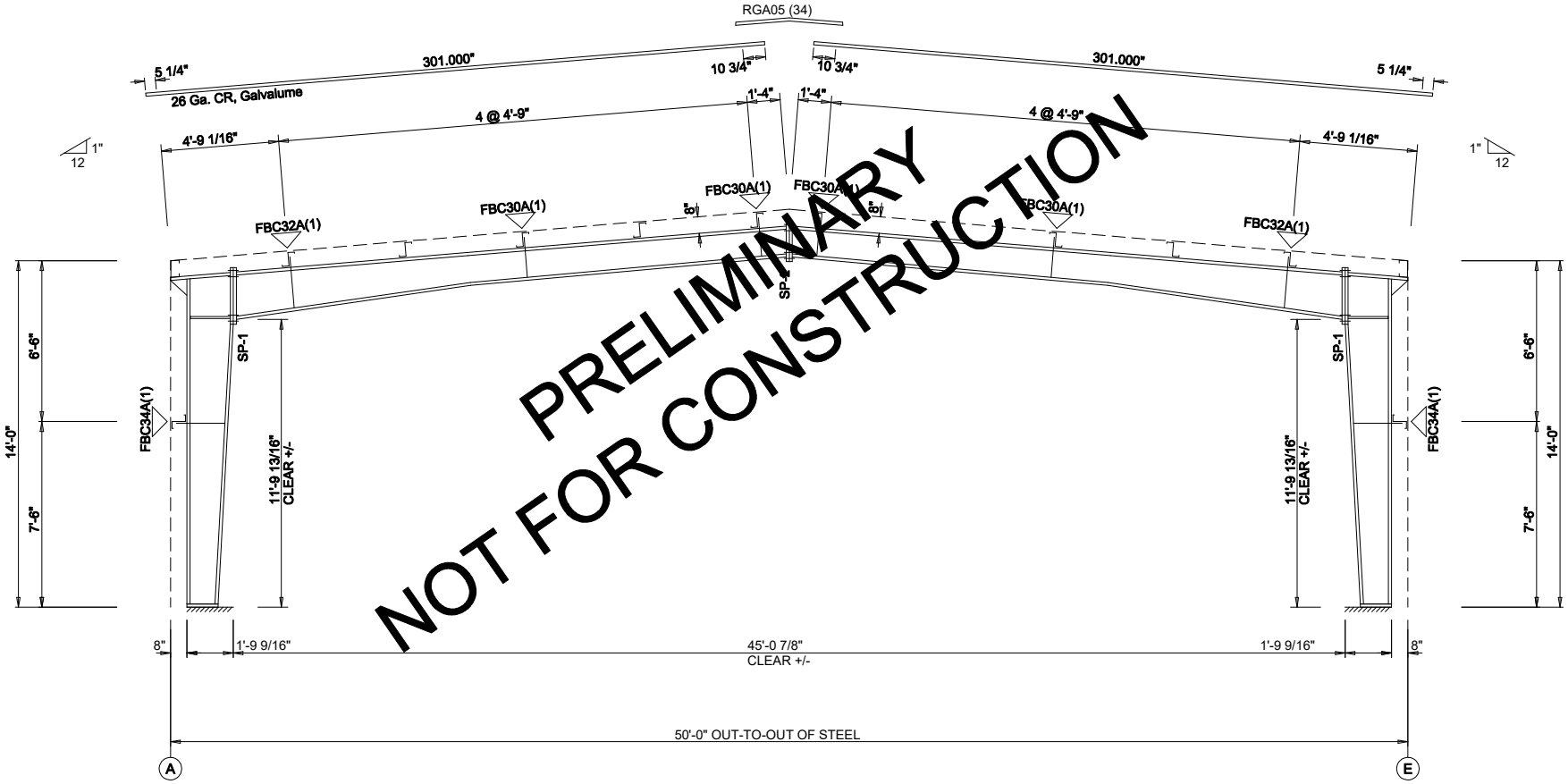

PRELIMINARY
NOT FOR CONSTRUCTION

RIGID FRAME ELEVATION: FRAME LINE 2 3 4

THE CLEAR HEIGHTS SHOWN ABOVE ARE "ESTIMATED" CLEAR HEIGHTS AND ARE SUBJECT TO CHANGE BASED ON FINAL DESIGN.

TOPLINE STEEL BUILDINGS
WilsonBrad

Customer Name

Project Name
Jobsite Address
66086

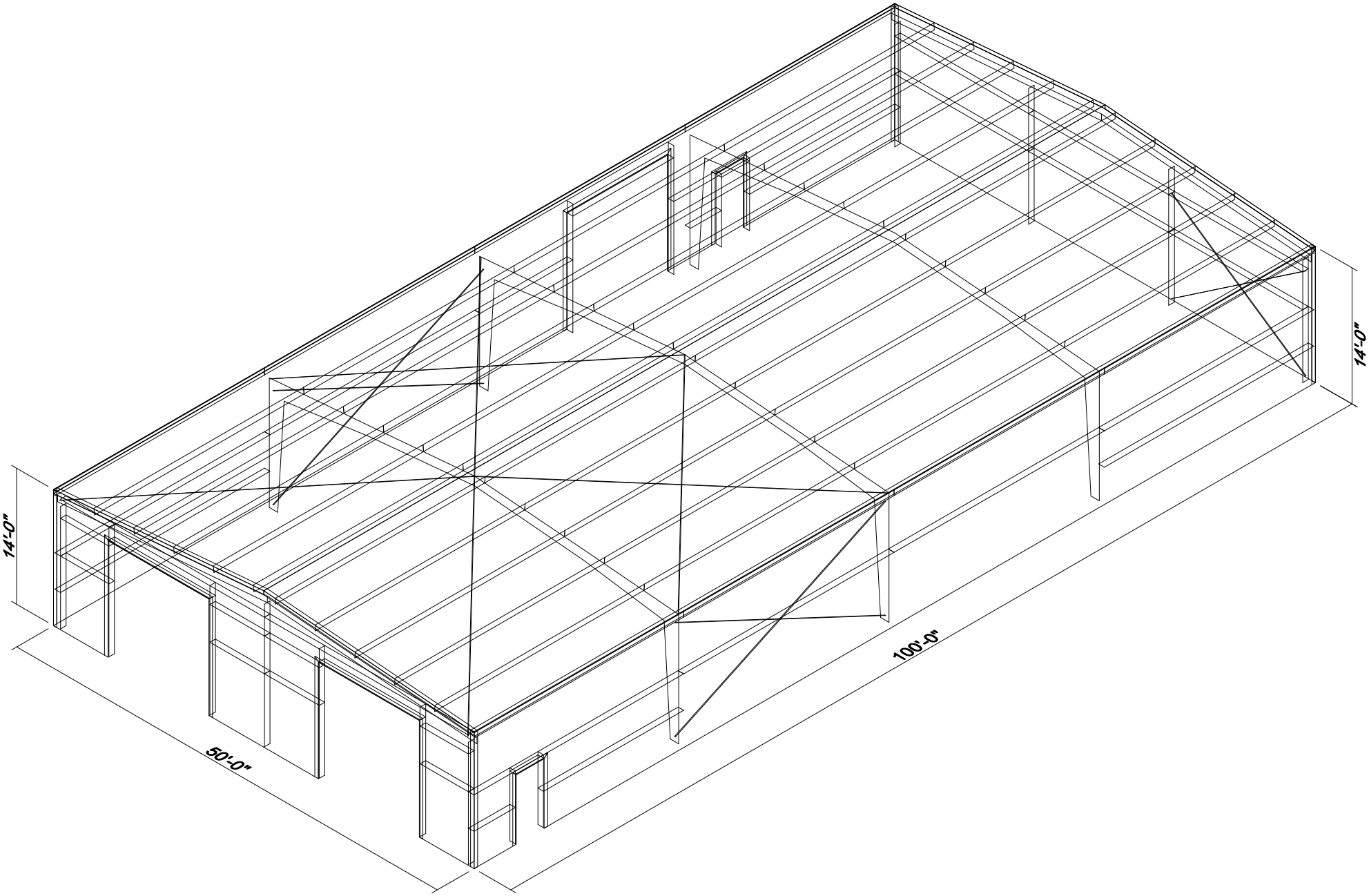
14'-0"
14'-0"
50'-0"
100'-0"

o Dia= 3/4"

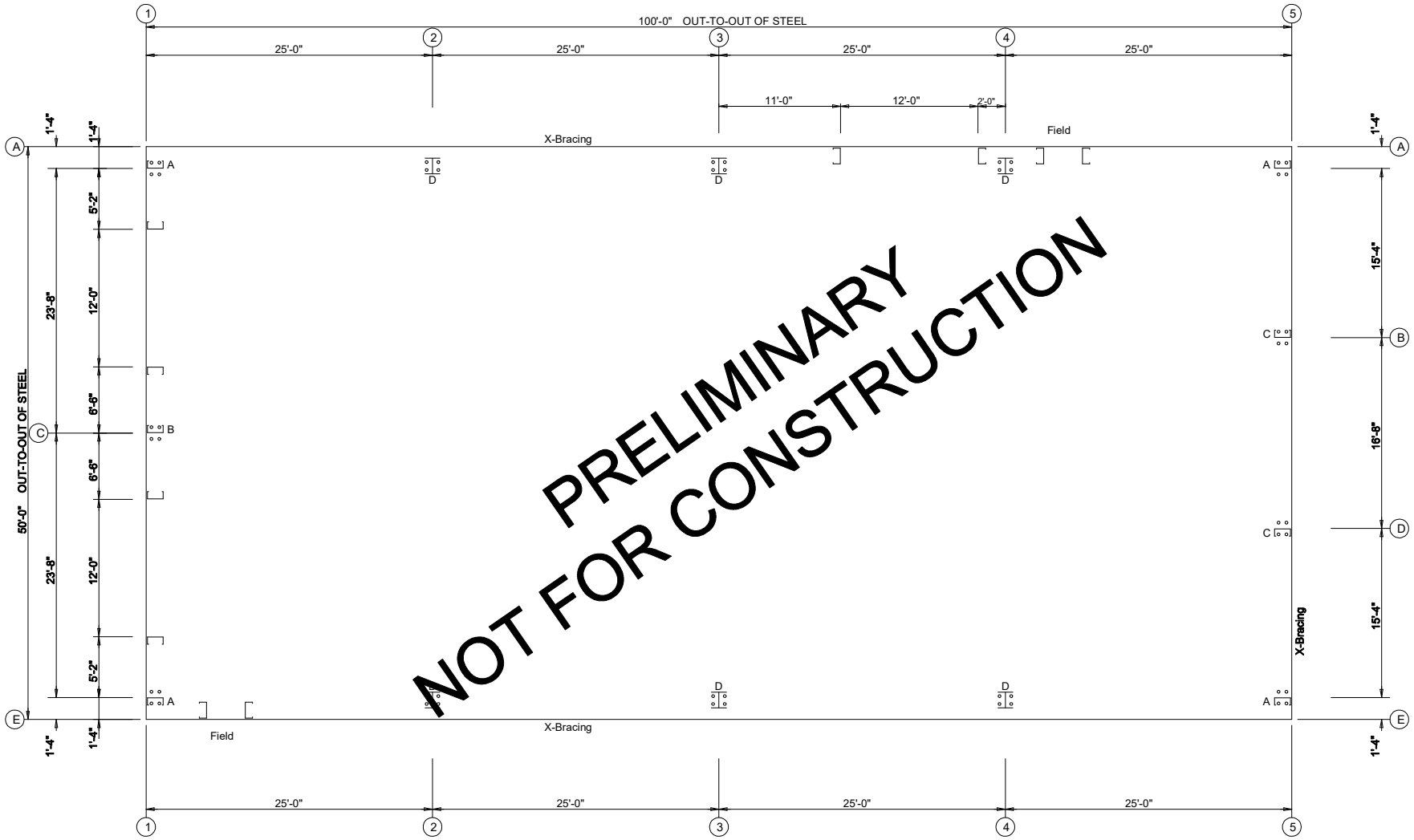

PRELIMINARY
NOT FOR CONSTRUCTION

ANCHOR BOLT PLAN

NOTE: All Base Plates @ 100'-0" (U.N.)

TOPLINE STEEL BUILDINGS
WilsonBrad

Customer Name

Project Name
Jobsite Address
66086

The Site Plan and Preliminary Plat applications submitted for 00000 West Street have been continued to a future date TBD in the Council Chambers, located at 321 S Delaware Street.

Boards and Committees Application

City of Tonganoxie

Submitted On:
January 30th, 2020 @ 9:34pm

Name (First and Last)	Jennifer McCutchen
grp_q8PcIz	107 W 2nd St Tonganoxie KS 66086
Email	jennifermccutchen86@gmail.com
Phone Number	9136207936
Are you a registered voter?	Yes
Do you live within the city limits of Tonganoxie?	Yes
Where do you work? Please include your job title and a brief description of your job duties and responsibilities.	Maximus Federal Supervisor Oversee day to day operations in a Medicare call center.
What Board/Committee would you like to serve on?	Planning Commission
Why do you wish to serve on this board?	I am interested in the growth and development of our community.
What other Tonganoxie boards and committees have you served on?	Spooktacular Planning Committee
Is this an application for a reappointment to a board you currently serve on?	No
Describe any work or volunteer experience that is related to the function of this board or committee.	I am not experienced in planning and zoning but I am interested in and looking forward to learning as much as I can.
Select your highest education completed.	High School
Other information or comments	

Jennifer McCutchen

jenniferrmccutchen@maximus.com
107 West Second Street
Tonganoxie, Kansas 66086
Mobile: (913)-620-7936

Professional Experience

Supervisor- Medicare Advance Resolution Center, Contact Center Operations
MAXIMUS Federal ▪ Lawrence, Kansas ▪ October 2019 – Present,

- Leading and maintaining a highly skilled team of Customer Service Representatives
- Completing all administrative duties related to the ARC department
- Computer proficiency

Senior Specialist - Medicare Advanced Resolution Center, Contact Center Operations
MAXIMUS Federal ▪ Lawrence, Kansas ▪ September 2017 – October 2019,

- Performed outbound phone and written correspondence to resolve advanced Medicare issues
- Received incoming correspondence via phone regarding advanced Medicare issues
- Served as a mentor for acting Medicare ARC Senior Specialists
- Worked special projects as part of the ARC backlog/SWAT team

Customer Service Representative - Medicare Web Chat/Technical Support
General Dynamics ▪ Lawrence, Kansas ▪ May 2014 - September 2017,

- Received incoming correspondence via chat and phone regarding mymedicare.gov
- Provided general Medicare information and technical support troubleshooting
- Answered both email and TTY correspondence regarding Medicare programing

Medicare Customer Service Representative
General Dynamics ▪ Lawrence, Kansas ▪ August 2013 – May 2014,

- Remained up to date on all required trainings
- Answered inbound calls regarding the Medicare program from insurance recipients
- Demonstrated performance improvement in all required areas while adhering to all regulations policies and procedures
- Excelled while being a part of a growing team

Customer Service/Cashier/Switchboard Operator
Cabela's ▪ Kansas City, Kansas ▪ August 2012 - September 2013,

- Greeted customers and offered immediate assistance upon arrival

Jennifer McCutchen

jenniferrmccutchen@maximus.com
107 West Second Street
Tonganoxie, Kansas 66086
Mobile: (913)-620-7936

- Cross-trained and provided back up for other team members when needed
- Operated cash register, answered phones and directed calls to appropriate departments

Customer Service/Cashier/Shift Supervisor
Halloween Express ▪ Lawrence, Kansas ▪ August 2011 – November 2011,

- Greeted customers entering the store to ascertain what each customer wanted and/or needed
- Worked as a team member performing cashier duties and housekeeping duties
- Provided product assistance while offering outstanding customer service

Emergency Room Technician
Cushing Memorial Hospital ▪ Leavenworth, Kansas ▪ June 2006 – August 2011,

- Admitted patients to the Emergency Room
- Handled money in regards to pre-payment for Emergency Room visits
- Answered and transferred calls
- Administered patient care and customer service

Assistant Manager
Dollar General ▪ Tonganoxie, Kansas ▪ June 2004 – June 2005,

- Assisted customers with store and product complaints
- Worked as a team member performing cashier duties while giving great customer service
- Administered light housekeeping duties and responsible for opening and closing store
- Cross-trained and provided back up for other customer service representatives when needed.
- Handled money in regard to paychecks and nightly bank deposits

Volunteer and Committees

Spooktacular Planning Committee ▪ Tonganoxie, Kansas ▪ 2014-2019

- Organized the event and oversaw operations on the day of the event

Volunteer for Tongie Days ▪ Tonganoxie, Kansas ▪ 2017-2018

Jennifer McCutchen

jenniferrmccutchen@maximus.com
107 West Second Street
Tonganoxie, Kansas 66086
Mobile: (913)-620-7936

Education and Certifications

- Certified Medical Assistant – Pinnacle Career Institute , Lawrence KS (2006)
- High School Diploma, Tonganoxie High School, Tonganoxie, KS (2004)

Skills related to the position I'm applying for

- Previous supervisor experience
- Experience working with customers both in person and on the phone
- Great customer service
- Previous training experience
- Technical support
- Experience working on an individual basis and in a team setting

Reference

Available Upon Request

Dear Planning and Zoning,

Please accept this as my letter of intent to be considered for a seat on Planning and Zoning. I have lived in Tonganoxie for many years and have had the opportunity to see how both my parents serve this great city. Like my parents, I to have a love for this community and believe I would be a strong addition to Planning and Zoning due to my age and knowledge of the City as a whole. While I don't have much knowledge of planning and zoning, it is something I am interested in learning and mastering. The position which our community has entrusted you to serve upon is one that can bring our city great opportunities.

As a citizen and hopefully the next member of Planning and Zoning I would love nothing more than to be part of helping guide Tonganoxie into a successful future for many years to come.

Thank you for your consideration,

Jennifer McCutchen

DUE DATE:

OMB No. 0607-0094: Approval Expires 02/28/2019

FORM **C-404** (3-21-2016)

U.S. DEPARTMENT OF COMMERCE
Economics and Statistics Administration
U.S. CENSUS BUREAU

REPORT OF BUILDING OR ZONING PERMITS ISSUED FOR NEW PRIVATELY-OWNED HOUSING UNITS

Title 13, United States Code, Sections 131 and 182, authorizes the Census Bureau to conduct this collection and to request your voluntary assistance. These data are subject to provisions of Title 13, United States Code, Section 9(a) exempting data that are customarily provided in public records from rules of confidentiality. This collection has been approved by the Office of Management and Budget (OMB). The eight-digit OMB approval number is 0607-0094 and appears at the upper right of this page. Without this approval we could not conduct this survey. We estimate this survey will take an average of 8 minutes per response for those that report monthly and 23 minutes for those that report annually to complete. More information about this estimate and an address where you may write with comments is on the back of this form.

IMPORTANT:
Please see the back of this form for more information and instructions for completing the survey.

For further assistance, call **1–800–845–8244,** or e-mail us at **EID.RCB.BPS@census.gov**

How can I report?

Via **Fax: 1–877–273–9501**

Via **Mail:**
U.S. Census Bureau
1201 East 10th Street
Jeffersonville, IN 47132–0001

Via **Internet** or to get **Help:**
econhelp.census.gov/bps
Use your unique username and original password.

MELANIE TWEEDY
ADMIN ASST
FOR CITY OF TONGANOXIE
BOX 326
TONGANOXIE KS 66086

☐ Name Change ☐ Spelling Correction ☐ Political Description Change

(Please correct any errors in name, address, and ZIP Code)

Username: Password:

1. PERIOD IN WHICH PERMITS WERE ISSUED: January 2020

2. GEOGRAPHIC COVERAGE *(For our latest information on your office's coverage, see www.census.gov/construction/bps/pdf/footnote.pdf)*
Did your permit system have a geographic coverage change? ☐ Yes, *continue.* ☑ No, *skip to Section 3.*

Mark an (X) in the appropriate box and enter the requested information. If more space is needed continue in Section 5.

051 ☐ Permits no longer required to build new residential buildings	Effective Date	
052 ☐ Permit office has merged with another permit jurisdiction . .	Effective Date	Name of permit jurisdiction with which your office has merged
053 ☐ Permit office has split into two or more jurisdictions	Effective Date	Name of additional jurisdiction(s) now issuing permit(s)
054 ☐ Extraterritorial jurisdiction(ETJ)/Annexation	Effective Date	Define ETJ or annexation

3. NEW HOUSING UNITS
a. Were there any building permits issued for new housing units during this period?
☐ Yes, *enter data below.* ☑ No, *stop and return this form.* Your report is important even if no permits were issued.

Type of Structure	Total Number of Buildings (1)	Total Number of Housing Units (2)	Total Valuation of Construction *($ value – omit cents)* (3)
101 **b.** Single-family houses, **detached and attached** (must meet the following criteria: no unit above or below the other; wall extends from ground to roof; and, separate utilities for each unit) *[Exclude manufactured HUD-inspected homes.]*			
103 **c.** Two-unit buildings			
104 **d.** Three- and four-unit buildings			
105 **e.** Five-or-more unit buildings			

4. ADDITIONAL INFORMATION ON INDIVIDUAL RESIDENTIAL PERMITS, FROM SECTION 3, VALUED AT $1,000,000 OR MORE
(If more space is needed, please attach a separate sheet.)

Description and Site Address (1)	Owner or Builder (2)	Number of Buildings (3)	Number of Housing Units (4)	Valuation of Construction *($ value – omit cents)* (5)
Kind of building Site address KS City, State, ZIP Code	Name Address City, State, ZIP Code			
Kind of building Site address KS City, State, ZIP Code	Name Address City, State, ZIP Code			

5. COMMENTS *(Continue on a separate sheet)*

6. PERSON TO CONTACT REGARDING THIS REPORT

E-mail address: MTWEEDY@TONGANOXIE.ORG

Name: MELANIE TWEEDY

Internet web address:

Telephone: 913 845 2620 1010

Fax: 913 845 9760

See instructions on reverse side.

INSTRUCTIONS FOR COMPLETING FORM C-404, "REPORT OF BUILDING OR ZONING PERMITS ISSUED FOR NEW PRIVATELY-OWNED HOUSING UNITS"

We estimate this survey will take an average of 8 minutes per response for those that report monthly and 23 minutes for those that report annually to complete, including the time for reviewing instructions, searching existing data sources, gathering and maintaining the data needed, and completing and reviewing the collection of information.

Send comments regarding this burden estimate or any other aspect of this collection of information, including suggestions for reducing this burden, to: ECON Survey Comments 0607-0094, U.S. Census Bureau, 4600 Silver Hill Road, Room EMD-6K064, Washington, DC 20233. You may e-mail comments to ECON.Survey.Comments@census.gov Be sure to use ECON Survey Comments 0607-0094 as the subject.

GENERAL INSTRUCTIONS FOR EACH SECTION

(Use your unique username and password provided to report via Internet: econhelp.census.gov/bps)

(Answers to Frequently Asked Questions can be found at www.census.gov/permitsfaq)

1. **PERIOD IN WHICH PERMITS WERE ISSUED –** Include all privately-owned residential permits which were authorized during the **month** or **year** shown.

2. **GEOGRAPHIC COVERAGE –** If there has been a change in the area covered by your office, enter explanations in space provided next to selections 051–054 as applicable. If more space is needed, continue in Section 5. To review our latest information on your office's coverage, see **www.census.gov/construction/bps/pdf/footnote.pdf.** Report discrepancies by either entering in Section 5, calling 1–800–845–8244 with the information or e-mailing us at EID.RCB.BPS@census.gov.

   051 (Discontinued) – Permits are no longer required, by law, to build new residential buildings (i.e., new homes, new apartments).

   052 (Merged) – Another jurisdiction has taken over the responsibility of issuing permits for your office; OR your office has taken over the responsibility of issuing permits for another office.

   053 (Split) – Permit office no longer covers a particular jurisdiction because: (1) that area now issues its own building permits; (2) another jurisdiction issues the permits for that area; or (3) that area no longer requires permits.

   054 (Extraterritorial jurisdiction (ETJ)/Annexation) – Permit office is now responsible for additional land area outside of its original boundaries.

   Also report in Section 5, if your permit office officially changed its name, had a spelling correction, or political description change (i.e., from town to city, city to village, etc.)

3. **NEW HOUSING UNITS –** Summarize information for number of buildings, number of housing units, and valuation of construction as shown on the building or zoning permit. Enter the valuation as shown on the permit. If no valuation is listed, enter your best estimated value. If no value is required, annotate in Section 5. When the acronym "NVR" (No Value Required) appears in the address label area, comments referencing value are no longer necessary.

   3a. No permits issued – Return your form even if no permits were issued, after marking the box next to "No" in this section.

   3b. Single-family houses, detached and attached – Include all new privately-owned detached and attached single-family houses. Include attached single-family houses, known commonly as townhouses or row houses, where: (1) each unit is separated from adjoining units by a wall that extends from ground to roof, (2) no unit is above or below another unit, and (3) each unit has separate heating and separate utility meters.

   3c. Two-unit buildings – Include all new privately-owned residential buildings that contain two housing units, and do not meet **all** criteria of attached single-family as shown under Section 3b.

   3d. Three- and four-unit buildings – Include all new privately-owned residential buildings that contain three or four housing units, and do not meet **all** criteria of attached single-family as shown under Section 3b.

   3e. Five-or-more unit buildings – Include all new privately-owned residential buildings that contain five or more housing units, and do not meet **all** criteria of attached single-family as shown under Section 3b.

4. **ADDITIONAL INFORMATION ON INDIVIDUAL RESIDENTIAL PERMITS, FROM SECTION 3, VALUED AT $1,000,000 OR MORE –** Enter **additional** data from individual permits valued at $1,000,000 or more included in Section 3. If more than two such permits were issued, attach a separate sheet.

5. **COMMENTS –** Enter any explanations, miscellaneous notes or questions. Include any revisions to data entered on previous forms, identifying the applicable survey period, the type of structure (Section 3b–e) and corrected entries.

6. **PERSON TO CONTACT REGARDING THIS REPORT –** Please fill in any blank areas or make any corrections to information already entered in these fields.

INSTRUCTIONS FOR CLASSIFYING RESIDENTIAL BUILDINGS

RESIDENTIAL BUILDINGS

Residential buildings are buildings containing one or more housing units. **A housing unit is a house, an apartment, a group of rooms or a single room intended for occupancy as separate living quarters.** Separate living quarters are those in which the occupants live separately from any other individuals in the building and which have a direct access from the outside of the building or through a common hall.

Some jurisdictions issue separate permits for individual units of a multifamily building. In this case, report the total number of units expected in a multifamily building when the first units are authorized. If the total number of buildings, units and valuation for the entire project is unknown, indicate in Section 5 or call our staff. Do NOT report permits for individual units in multifamily buildings separately.

Some jurisdictions issue building permits for residential construction in phases: foundation, shell or superstructure, and interior finishing. In this case, include the number of buildings, housing units and valuation for the intended building when the shell or superstructure permit is issued. Include foundation and interior finishing permits only when issued separately and a valuation of construction is available. In these two cases, enter the valuation in Section 3b–e, depending on the number of housing units in the intended superstructure, and zero for the buildings and units.

PERMITS TO INCLUDE

- privately-owned residential buildings, which include all residential buildings owned or partially owned by a private company or an individual during the period of construction
- housing for the elderly, such as assisted living facilities, that do not have 24-hour skilled nursing care
- "turnkey" housing, which is housing that will be sold to a local public housing authority when completed
- all housing built by nonprofit organizations
- buildings manufactured partially off-site and transported and assembled at the construction site, such as prefabricated, panelized, precut, sectional and modular (these do not include manufactured (mobile) HUD-inspected homes)
- residential permits issued in phases, as described above
- permits for multifamily housing units issued as commercial
- reissued expired permits with significant changes to construction plans

PERMITS TO EXCLUDE

- publicly-owned buildings
- nonresidential buildings
- moved or relocated buildings
- farm buildings, such as silos, barns, etc.
- manufactured (mobile) HUD-inspected homes including related foundations and placement pads
- group quarters, such as dormitories, jails, nursing homes, etc.
- hotels/motels
- other structures on residential property, such as sheds, garages, pools, etc., when permitted separately
- landscaping
- demolitions
- maintenance and repair, which are expenses to keep a property in ordinary working condition
- residential additions, alterations, renovations and conversions
- inspections
- certificates of occupancy for residential construction
- separate permits issued for mechanical, electrical or plumbing work
- reissued expired permits if construction plans have not changed

MISCELLANEOUS CLASSIFICATION INSTRUCTIONS

- Enter a building in only one category in Section 3. If you cannot determine a category, please call our staff.
- If a building has mixed residential and nonresidential use, enter the housing units based on the residential portion of the building. Please estimate the valuation based on the residential portion of the building only.
- Classify all buildings that are being totally rebuilt on an existing foundation as new construction.
- Type of ownership (e.g. condominium, cooperative, timeshare, etc.) is **NOT** considered when classifying a building.

HOME BUILDERS ASSOCIATION
OF GREATER KANSAS CITY

Residential Building Permit Statistics

JANUARY 2020

	Single Family Units^	Multi-Family Units%	Total Units	S-F Units YTD	M-F Units YTD	Total Units YTD
CASS COUNTY						
Archie	0	0	**0**	0	0	**0**
Belton	2	0	**2**	2	0	**2**
Cass County	0	0	**0**	0	0	**0**
Cleveland	0	0	**0**	0	0	**0**
Drexel	0	0	**0**	0	0	**0**
Harrisonville	0	0	**0**	0	0	**0**
Lake Winnebago	8	0	**8**	8	0	**8**
Lee's Summit	3	0	**3**	3	0	**3**
Peculiar	4	0	**4**	4	0	**4**
Pleasant Hill	0	0	**0**	0	0	**0**
Raymore	3	0	**3**	3	0	**3**
Village of Loch Lloyd	2	0	**2**	2	0	**2**
	22	**0**	**22**	**22**	**0**	**22**
CLAY COUNTY						
Clay County	2	0	**2**	2	0	**2**
Excelsior Springs	5	0	**5**	5	0	**5**
Gladstone	0	0	**0**	0	0	**0**
Kansas City	34	0	**34**	34	0	**34**
Kearney	1	0	**1**	1	0	**1**
Lawson	0	0	**0**	0	0	**0**
Liberty	2	0	**2**	2	0	**2**
North Kansas City	0	0	**0**	0	0	**0**
Pleasant Valley	0	0	**0**	0	0	**0**
Smithville	0	0	**0**	0	0	**0**
	44	**0**	**44**	**44**	**0**	**44**
JACKSON COUNTY						
Blue Springs	20	0	**20**	20	0	**20**
Buckner	0	0	**0**	0	0	**0**
Grain Valley	2	0	**2**	2	0	**2**
Grandview	0	0	**0**	0	0	**0**
Greenwood	0	0	**0**	0	0	**0**
Independence	6	0	**6**	6	0	**6**
Jackson County	2	0	**2**	2	0	**2**
Kansas City	11	0	**11**	11	0	**11**
Lake Lotawana	0	0	**0**	0	0	**0**
Lee's Summit	25	0	**25**	25	0	**25**
Oak Grove	0	0	**0**	0	0	**0**
Raytown	0	0	**0**	0	0	**0**
Sugar Creek	0	0	**0**	0	0	**0**
	66	**0**	**66**	**66**	**0**	**66**
PLATTE COUNTY						
Kansas City	14	0	**14**	14	0	**14**
Parkville	0	0	**0**	0	0	**0**
Platte City	0	0	**0**	0	0	**0**
Platte County	10	0	**10**	10	0	**10**
Riverside	3	0	**3**	3	0	**3**
Weatherby Lake	0	0	**0**	0	0	**0**
Weston	0	0	**0**	0	0	**0**
	27	**0**	**27**	**27**	**0**	**27**
JOHNSON COUNTY						
De Soto	1	0	**1**	1	0	**1**
Edgerton	0	0	**0**	0	0	**0**
Fairway	0	0	**0**	0	0	**0**
Gardner	11	0	**11**	11	0	**11**
Johnson County	2	0	**2**	2	0	**2**
Leawood	6	0	**6**	6	0	**6**
Lenexa	18	0	**18**	18	0	**18**
Merriam	0	0	**0**	0	0	**0**
Mission Hills	0	0	**0**	0	0	**0**
Olathe	44	0	**44**	44	0	**44**
Overland Park	27	0	**27**	27	0	**27**
Prairie Village	7	0	**7**	7	0	**7**
Roeland Park	0	0	**0**	0	0	**0**
Shawnee	5	67	**72**	5	67	**72**
Spring Hill	7	0	**7**	7	0	**7**
Westwood	0	0	**0**	0	0	**0**
	128	**67**	**195**	**128**	**67**	**195**

	Single Family Units^	Multi-Family Units%	Total Units	S-F Units YTD	M-F Units YTD	Total Units YTD
LEAVENWORTH COUNTY						
Basehor	5	0	**5**	5	0	**5**
Lansing	8	0	**8**	8	0	**8**
Leavenworth County	4	0	**4**	4	0	**4**
Leavenworth	0	0	**0**	0	0	**0**
Tonganoxie	0	0	**0**	0	0	**0**
	17	**0**	**17**	**17**	**0**	**17**
WYANDOTTE COUNTY						
Bonner Springs	1	0	**1**	1	0	**1**
Edwardsville	0	0	**0**	0	0	**0**
KCK/Wyandotte Co	39	0	**39**	39	0	**39**
	40	**0**	**40**	**40**	**0**	**40**
MIAMI COUNTY						
Louisburg	0	0	**0**	0	0	**0**
Miami County	2	0	**2**	2	0	**2**
Osawatomie	0	0	**0**	0	0	**0**
Paola	0	0	**0**	0	0	**0**
Spring Hill	9	0	**9**	9	0	**9**
	11	**0**	**11**	**11**	**0**	**11**
Totals	**355**	**67**	**422**	**355**	**67**	**422**

Comparison of Single Family Building Units for Greater Kansas City

(Cass, Clay, Jackson, Platte, Johnson, Leavenworth, Miami, Wyandotte Counties)

Month/Year	2013	2014	2015	2016	2017	2018	2019	2020
January	273	287	240	274	457	463	234	355
February	224	216	260	408	477	463	234	
March	335	362	393	542	571	549	357	
April	444	439	437	523	562	564	411	
May	337	385	395	503	504	598	391	
June	333	364	438	578	567	569	387	
July	409	375	399	494	512	485	471	
August	354	352	425	536	480	514	429	
September	384	383	462	424	514	353	396	
October	369	468	459	466	583	485	500	
November	340	312	360	417	502	354	410	
December	288	328	432	352	468	276	434	
Annual Total	4,090	4,271	4,700	5,517	6,197	5,673	4,654	355

Comparison of Permits By Units Issued Year to Date

2013 - 2020

	S-F Units	M-F Units	Total Units
2013	273	0	273
2014	287	539	826
2015	240	214	454
2016	274	85	359
2017	457	10	467
2018	463	0	463
2019	234	407	641
2020	355	67	422

^The Single Family number is units and includes both attached and detached units.
%Multi-Family units are in buildings with 5 or more units.
Not available at time of report

Permit information reflects the most recent data at time of publication. In order to ensure accurate recording of residential building permit statistics, the HBA may revise monthly and year-to-date figures when updated data is made available. *Copyright 2020 Home Builders Assoc of Greater Kansas City. All rights reserved.*

HOME BUILDERS ASSOCIATION
OF GREATER KANSAS CITY

Residential Building Permit Statistics

DECEMBER 2019

	Single Family Units^	Multi-Family Units%	Total Units	S-F Units YTD	M-F Units YTD	Total Units YTD
CASS COUNTY						
Archie	0	0	**0**	3	0	**3**
Belton	0	0	**0**	83	0	**83**
Cass County	0	0	**0**	21	0	**21**
Cleveland	0	0	**0**	1	0	**1**
Garden City	0	0	**0**	0	0	**0**
Harrisonville	1	0	**1**	9	0	**9**
Lake Winnebago	0	0	**0**	38	0	**38**
Lee's Summit	5	0	**5**	35	0	**35**
Peculiar	0	0	**0**	56	0	**56**
Pleasant Hill	2	0	**2**	21	0	**21**
Raymore	11	0	**11**	139	0	**139**
Village of Loch Lloyd	0	0	**0**	7	0	**7**
	19	**0**	**19**	**413**	**0**	**413**
CLAY COUNTY						
Clay County	1	0	**1**	35	0	**35**
Excelsior Springs	0	0	**0**	14	0	**14**
Gladstone	0	0	**0**	4	0	**4**
Kansas City	23	0	**23**	412	0	**412**
Kearney	12	0	**12**	70	0	**70**
Lawson	0	0	**0**	1	0	**1**
Liberty	6	0	**6**	34	0	**34**
North Kansas City	0	0	**0**	5	240	**245**
Pleasant Valley	0	0	**0**	0	0	**0**
Smithville	7	0	**7**	51	0	**51**
	49	**0**	**49**	**626**	**240**	**866**
JACKSON COUNTY						
Blue Springs	50	0	**50**	281	134	**415**
Buckner	0	0	**0**	0	0	**0**
Grain Valley	14	0	**14**	145	0	**145**
Grandview	0	0	**0**	3	160	**163**
Greenwood	0	0	**0**	0	0	**0**
Independence	7	0	**7**	107	0	**107**
Jackson County	2	0	**2**	68	82	**150**
Kansas City	7	0	**7**	104	248	**352**
Lake Lotawana	0	0	**0**	2	0	**2**
Lee's Summit	24	173	**197**	348	712	**1060**
Oak Grove	0	0	**0**	3	0	**3**
Raytown	0	0	**0**	0	0	**0**
Sugar Creek	0	0	**0**	0	0	**0**
	104	**173**	**277**	**1061**	**1336**	**2397**
PLATTE COUNTY						
Kansas City	18	0	**18**	159	0	**159**
Parkville	90	0	**90**	130	316	**446**
Platte City	0	0	**0**	0	0	**0**
Platte County	4	0	**4**	151	0	**151**
Riverside	0	0	**0**	7	0	**7**
Weatherby Lake	0	0	**0**	3	0	**3**
Weston	0	0	**0**	0	0	**0**
	112	**0**	**112**	**450**	**316**	**766**
JOHNSON COUNTY						
De Soto	7	0	**7**	61	0	**61**
Edgerton	0	0	**0**	0	0	**0**
Fairway	0	0	**0**	1	0	**1**
Gardner	12	0	**12**	155	0	**155**
Johnson County	2	0	**2**	46	0	**46**
Leawood	1	0	**1**	35	0	**35**
Lenexa	21	0	**21**	251	10	**261**
Merriam	0	0	**0**	12	0	**12**
Mission Hills	0	0	**0**	0	0	**0**
Olathe	38	0	**38**	494	49	**543**
Overland Park	20	0	**20**	323	857	**1180**
Prairie Village	4	0	**4**	65	0	**65**
Roeland Park	0	0	**0**	1	0	**1**
Shawnee	12	0	**12**	121	0	**121**
Spring Hill	5	0	**5**	108	0	**108**
Westwood	0	0	**0**	8	0	**8**
	122	**0**	**122**	**1681**	**916**	**2597**

	Single Family Units^	Multi-Family Units%	Total Units	S-F Units YTD	M-F Units YTD	Total Units YTD
LEAVENWORTH COUNTY						
Basehor	1	0	**1**	63	0	**63**
Lansing	0	0	**0**	2	0	**2**
Leav. County	10	0	**10**	69	0	**69**
Leavenworth	0	0	**0**	15	0	**15**
Tonganoxie	4	0	**4**	37	0	**37**
	15	**0**	**15**	**186**	**0**	**186**
WYANDOTTE COUNTY						
Bonner Springs	0	0	**0**	5	0	**5**
Edwardsville	0	0	**0**	0	0	**0**
KCK/Wyandotte Co	6	60	**66**	127	98	**225**
	6	**60**	**66**	**132**	**98**	**230**
MIAMI COUNTY						
Louisburg	0	0	**0**	35	0	**35**
Miami County	6	0	**6**	53	0	**53**
Osawatomie	0	0	**0**	0	0	**0**
Paola	0	0	**0**	3	0	**3**
Spring Hill	1	0	**1**	14	108	**122**
	7	**0**	**7**	**105**	**108**	**213**
Totals	**434**	**233**	**667**	**4654**	**3014**	**7668**

Comparison of Single Family Building Units for Greater Kansas City

(Cass, Clay, Jackson, Platte, Johnson, Leavenworth, Miami, Wyandotte Counties)

Month/Year	2012	2013	2014	2015	2016	2017	2018	2019
January	188	273	287	240	274	457	463	234
February	182	224	216	260	408	477	463	234
March	270	335	362	393	542	571	549	357
April	277	444	439	437	523	562	564	411
May	294	337	385	395	503	504	598	391
June	268	333	364	438	578	567	569	387
July	288	409	375	399	494	512	485	471
August	260	354	352	425	536	480	514	429
September	379	384	383	462	424	514	353	396
October	331	369	468	459	466	583	485	500
November	283	340	312	360	417	502	354	410
December	279	288	328	432	352	468	276	434
Annual Total	3,299	4,090	4,271	4,700	5,517	6,197	5,673	4,654

Comparison of Permits By Units Issued Year to Date

2012 - 2019

	S-F Units	M-F Units	Total Units
2012	3299	1775	5074
2013	4090	2879	6969
2014	4271	3910	8181
2015	4700	3995	8695
2016	5517	4451	9968
2017	6197	2434	8631
2018	5673	3245	8918
2019	4654	3014	7668

^The Single Family number is units and includes both attached and detached units.
%Multi-Family units are in buildings with 5 or more units.
Not available at time of report

Permit information reflects the most recent data at time of publication. In order to ensure accurate recording of residential building permit statistics, the HBA may revise monthly and year-to-date figures when updated data is made available. *Copyright 2020 Home Builders Assoc of Greater Kansas City. All rights reserved.*